METERING VALVES

H-1300 & MBV SERIES

MBV Series: Pat. Pending
No. 61/376,682

HAM-LET®
ADVANCED CONTROL TECHNOLOGY

H, HF & HXF-1300 SERIES FEATURES

- Forged-body 316 St.St.or Brass Construction
- Straight and Angle Patterns and Panel Mounting
- MAWP 2000 psig - (138 bar) For HXF
- MAWP 1000 psig - (69 bar) For H, HF
- MAWT 400°F (204°C)
- Flow coefficients (Cv) from 0.004 to 0.15
- Round & Slotted Handles with Screwdriver Slots
- HAM-LET LET-LOK® Ends, Male & Female NPT, HTC® Face Seal Bead End Connections
- 1°, 3° and 5° Stem Taper for required flow control
- Stem with Stopper Shoulder for maximum life

GENERAL

The H-1300 Series is a moderate-pressure instrumentation flow-regulating needle valve. It is generally used for instrumentation panels, sampling systems and accurate applications.
The valves are compact in size and structure and offer reliable low and moderate flow regulation with long service life.

HXF-1300 MATERIALS OF CONSTRUCTION

Item No.	Components	Qty	Valve Body Material	
			316 St.St.	Brass
1	Handle Set Screw	1	18-8 Stainless Steel	
2	Flow Fixing Screw	1	18-8 Stainless Steel	
3	Handle	1	St.St. ASTM A-276	Brass ASTM B-16
4	Panel Nut	1	St.St. ASTM A-276	Brass ASTM B-16
5	Safety Bonnet Sleeve	1	St.St. ASTM A-276	Brass ASTM B-16
6	Bonnet	1	St.St. ASTM A-276	Brass ASTM B-16
7	Stem	1	St.St. 174PH/A564	
8	Stem Ring	1	Glass-filled TFE	
9	O-ring	1	Viton® (fluorocarbon)	
10	Guide Ring	1	Glass-filled TFE	
11	Orifice	1	St.St. ASTM A-276	Brass ASTM B-16
12	Body	1	St.St. ASTM A-182	Brass ASTM B-283

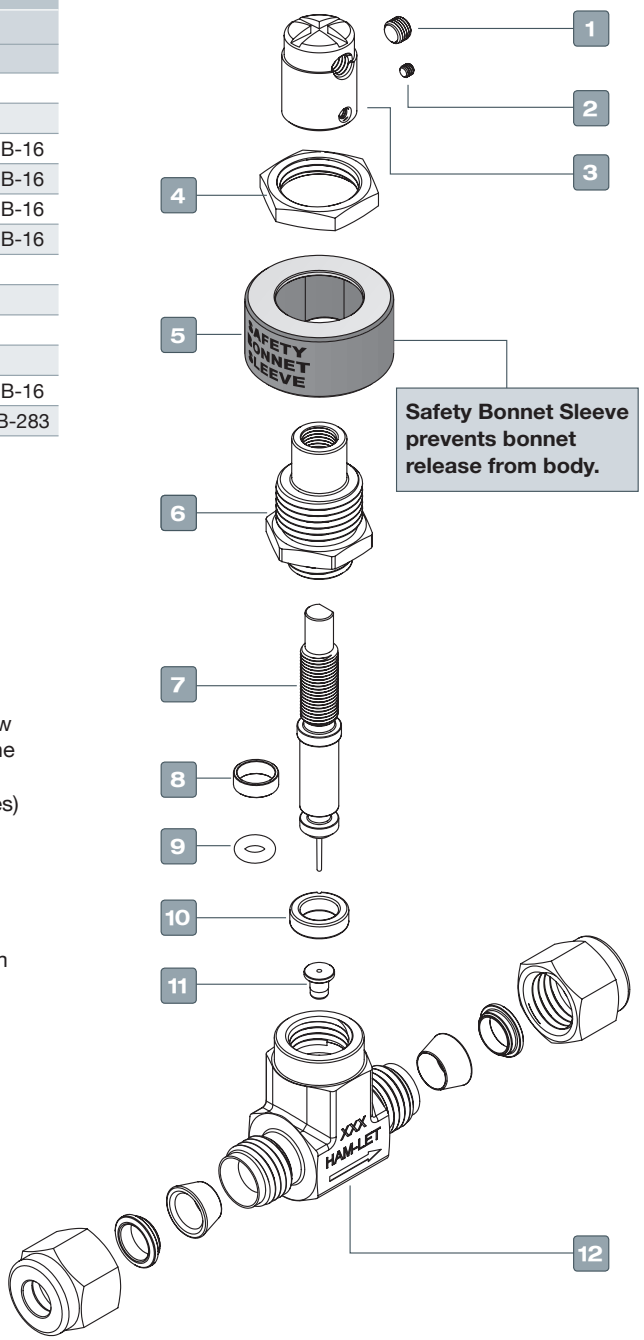

HXF SERIES STRAIGHT VALVE

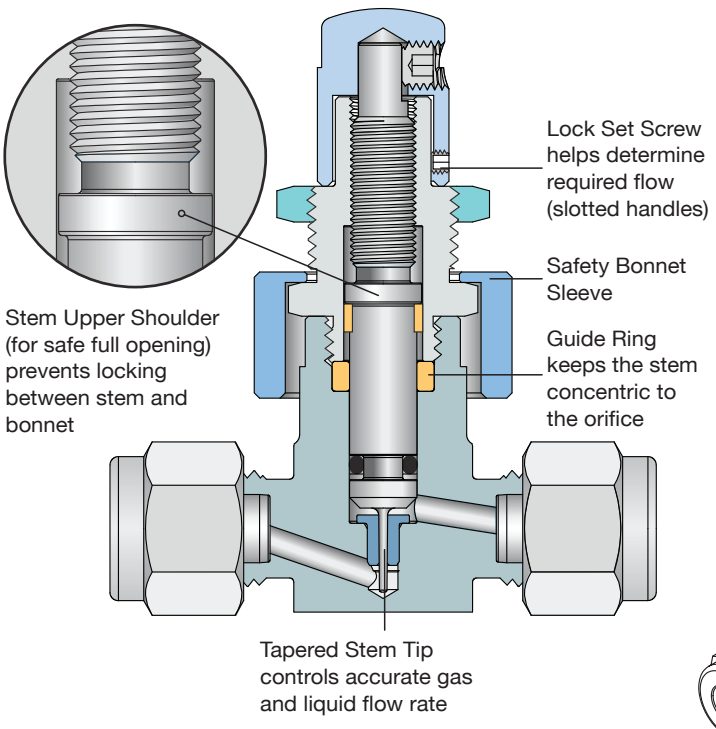

CLEANING & PACKAGING

HAM-LET H-1300 Metering Valve is treated with HAM-LET Passivation Cleaning and Packaging (Procedure 8075).
HAM-LET H-1300 Ball valves with face-seal end connections are treated with Oxygen Cleaning and Packaging (Procedure 8075).

H&HF-1300 MATERIALS OF CONSTRUCTION				
Item No.	Components	Qty	Valve Body Material	
			316 St.St.	Brass
1	Handle Set Screw	1	St.St. ASTM A-276	Brass ASTM B-16
2	Flow Fixing Screw	1	18-8 Stainless Steel	
3	Handle	1	St.St. ASTM A-276	
4	Panel Nut	1	St.St. ASTM A-276	Brass ASTM B-16
5	Safety Bonnet Sleeve	1	St.St. ASTM A-276	Brass ASTM B-16
6	Bonnet	1	St.St. ASTM A-276	Brass ASTM B-16
7	Stem	1	St.St. 174PH/A564	
8	O-ring	1	Viton® (fluorocarbon)	
9	Guide Ring	1	Glass-filled TFE	
10	Body	1	St.St. ASTM A-182	Brass ASTM B-283

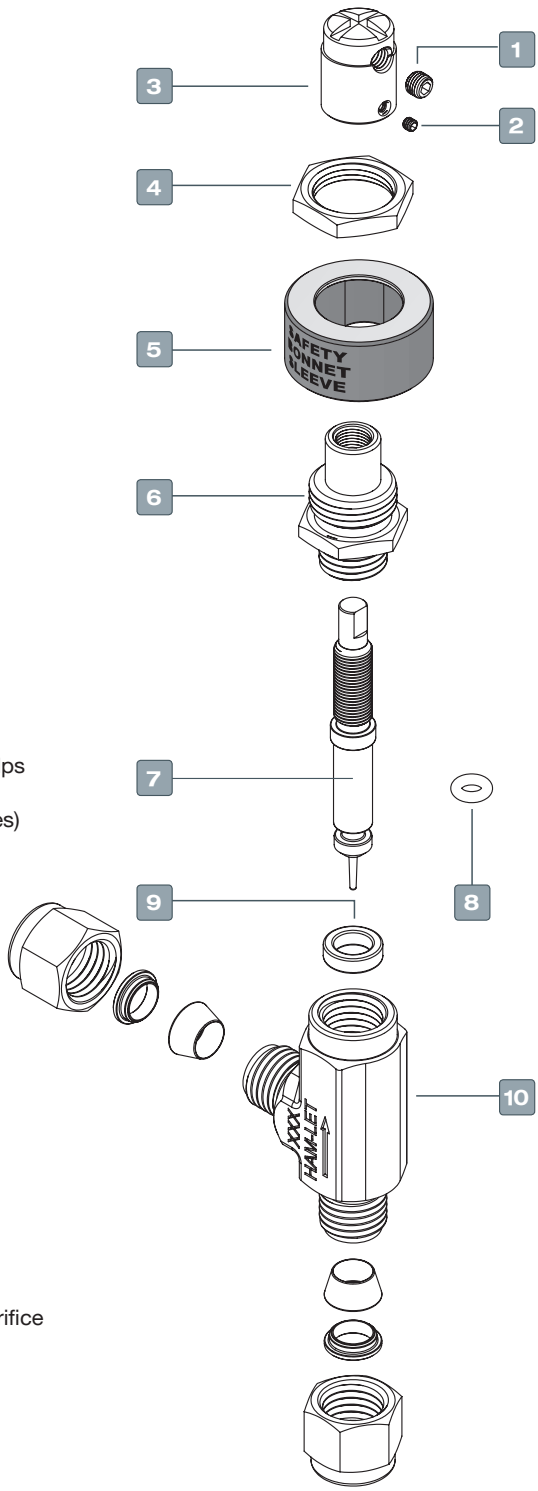

HF SERIES ANGLE VALVE

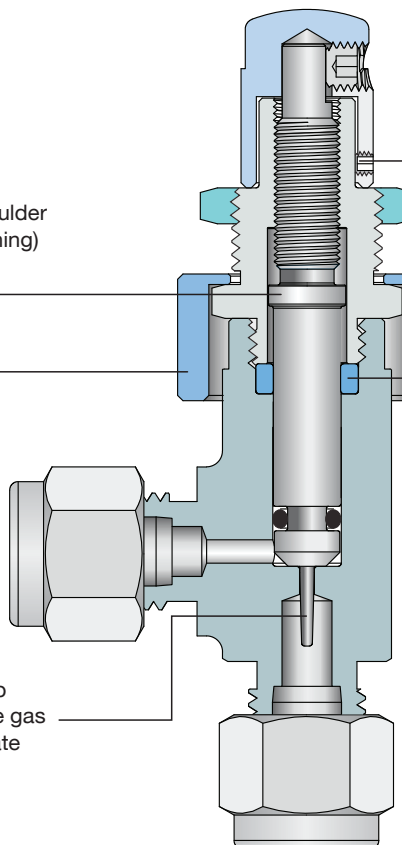

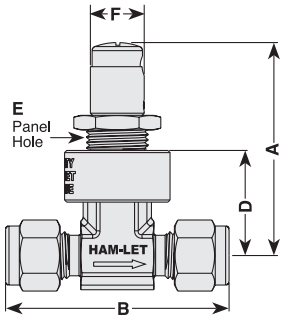

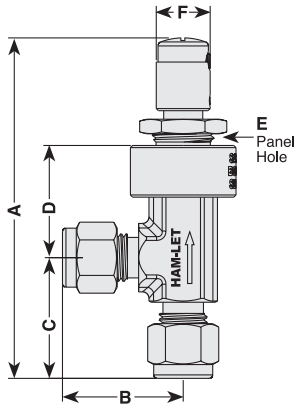

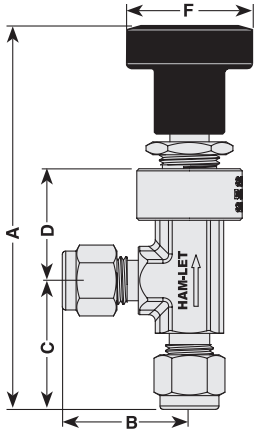

STANDARD CONFIGURATION DIMENSIONS

Basic Ordering Number	Stem Taper Angle	Orifice mm/in	Cv	Inlet	Outlet	A-Open mm	A-Open in	B mm	B in	C mm	C in	D mm	D in	E mm	E in	F
H-1300 Angle	50	3.3mm 0.13"	0.13 Max	1/4'' LET-LOK®	1/4'' LET-LOK®	95.7	3.77	29.6	1.17	30.0	1.18	26.0	1.02	14.8	0.58	29 mm 1.14''
				6MM LET-LOK®	6MM LET-LOK®	95.7	3.77	29.6	1.17	30.0	1.18	26.0	1.02	14.8	0.58	
H-1300 Straight				1/4'' LET-LOK®	1/4'' LET-LOK®	71.5	2.81	59.5	2.34	-	-	32.0	1.26	14.8	0.58	
				3/8'' LET-LOK®	3/8'' LET-LOK®	71.5	2.81	62.4	2.46	-	-	32.0	1.26	14.8	0.58	
				6MM LET-LOK®	6MM LET-LOK®	71.5	2.81	59.5	2.34	-	-	32.0	1.26	14.8	0.58	
				1/4'' Male NPT	1/4'' Male NPT	71.5	2.81	50.8	2.00	-	-	32.0	1.26	14.8	0.58	
H-1300 Angle	30	1.4mm 0.055"	0.03 Max	1/8'' LET-LOK®	1/8'' LET-LOK®	83.5	3.29	25.8	1.02	25.8	1.02	27.0	1.06	14.8	0.58	
				1/4'' LET-LOK®	1/4'' LET-LOK®	85.0	3.35	28.0	1.10	28.0	1.10	27.0	1.06	14.8	0.58	
				3MM LET-LOK®	3MM LET-LOK®	83.5	3.29	25.8	1.02	25.8	1.02	27.0	1.06	14.8	0.58	
				6MM LET-LOK®	6MM LET-LOK®	85.0	3.35	28.0	1.10	28.0	1.10	27.0	1.06	14.8	0.58	
				1/8'' Male NPT	1/8'' Male NPT	77.0	3.03	19.0	0.75	19.0	0.75	27.0	1.06	14.8	0.58	
				1/4'' Male NPT	1/4'' Male NPT	83.0	3.27	25.0	0.98	26.0	1.02	27.0	1.06	14.8	0.58	
				1/8'' Male NPT	1/8'' LET-LOK®	77.0	3.03	25.8	1.02	19.0	0.75	27.0	1.06	14.8	0.58	
				1/4'' Male NPT	1/4'' LET-LOK®	81.5	3.2	28.3	1.11	23.5	0.92	27.0	1.06	14.8	0.58	
				1/8'' Female NPT	1/8'' Female NPT	82.5	3.25	24.9	0.98	24.9	0.98	27.0	1.06	14.8	0.58	
HF-1300 Straight				1/8'' LET-LOK®	1/8'' LET-LOK®	70.6	2.78	51.3	2.02	-	-	27.0	1.06	14.8	0.58	12.5 mm 0.5''
				3MM LET-LOK®	3MM LET-LOK®	70.6	2.78	51.3	2.02	-	-	27.0	1.06	14.8	0.58	
				6MM LET-LOK®	6MM LET-LOK®	70.6	2.78	55.9	2.20	-	-	27.0	1.06	14.8	0.58	
				1/4" LET-LOK®	1/4" LET-LOK®	70.6	2.78	55.9	2.20	-	-	27.0	1.06	14.8	0.58	
				1/8'' Male NPT	1/8'' Male NPT	70.6	2.78	38.1	1.50	-	-	27.0	1.06	14.8	0.58	
				1/4'' Male NPT	1/4'' Male NPT	70.6	2.78	49.8	1.96	-	-	27.0	1.06	14.8	0.58	
				1/8'' Female NPT	1/8'' Female NPT	70.6	2.78	49.3	1.94	-	-	27.0	1.06	14.8	0.58	
				1/4''' Male Face Seal	1/4'' Male Face Seal	70.6	2.78	52.3	2.06	-	-	27.0	1.06	14.8	0.58	
HXF-1300 Angle	10	0.8 mm 0.03''	0.004 Max	1/8'' LET-LOK®	1/8'' LET-LOK®	84.4	3.23	24.8	0.98	24.8	0.98	23.4	0.92	14.8	0.58	12.5 mm 0.5''
				1/4'' LET-LOK®	1/4'' LET-LOK®	85.0	3.35	26.0	1.02	26.0	1.02	23.4	0.92	14.8	0.58	
				3MM LET-LOK®	3MM LET-LOK®	84.4	3.32	24.8	0.98	24.8	0.98	23.4	0.92	14.8	0.58	
				1/8'' Male NPT	1/8'' LET-LOK®	77.5	3.05	24.8	0.98	24.8	0.98	23.4	0.92	14.8	0.58	
				1/4'' Male NPT	1/4'' LET-LOK®	82	3.22	27.3	1.07	24.8	0.98	23.4	0.92	14.8	0.58	
				1/8'' Male NPT	1/8'' Male NPT	84.4	3.32	24.9	0.98	24.9	0.98	23.4	0.92	14.8	0.58	
				1/4'' Male NPT	1/4'' Male NPT	84.4	3.32	24.9	0.98	24.9	0.98	23.4	0.92	14.8	0.58	
HXF-1300 Straight				1/8'' LET-LOK®	1/8'' LET-LOK®	59.6	2.34	48.0	1.89	-	-	24.4	0.96	14.8	0.58	12.5 mm 0.5''
				1/4'' LET-LOK®	1/4'' LET-LOKv	59.6	2.34	51.9	2.04	-	-	24.4	0.96	14.8	0.58	
				3MM LET-LOK®	3MM LET-LOK®	59.6	2.34	48.0	1.89	-	-	24.4	0.96	14.8	0.58	
				6MM LET-LOK®	6MM LET-LOK®	59.6	2.34	51.9	2.04	-	-	24.4	0.96	14.8	0.58	
				1/4'' Male NPT	1/4'' Male NPT	59.6	2.34	48.0	1.89	-	-	24.4	0.96	14.8	0.58	
				1/4'' Male Face Seal	1/4'' Male Face Seal	59.6	2.34	52.0	2.05	-	-	24.4	0.96	14.8	0.58	

Dimensions are for reference only, and are subject to change.

MAX PANEL THICKNESS

"HXF" Series - 4.3 mm (0.17'')
"H" and "HF" - 3.3 mm (0.13'')

TESTING

The H, HF and HXF Series metering valve designs have been tested for Proof and Burst.

Every H,HF & HXF-1300 metering valve is factory tested for proper assembly, using leak detection.

FLOW SETTING

H-1300 series metering valve is tested for bubble tight shut-off at 100 psig (6.8 bar) differential pressure.

HF-1300 series metering valve handle dead stop is set at 4 to 10 std cm3/min with 5 psig (0.34 bar) inlet pressure.

HXF-1300 series metering valve handle dead stop is set at 4 to 10 std cm3/min with 15 psig (1.0 bar) inlet pressure.

FLOW DATA AT 70°F (20°C)

H-1300 METERING VALVE 5° STEM

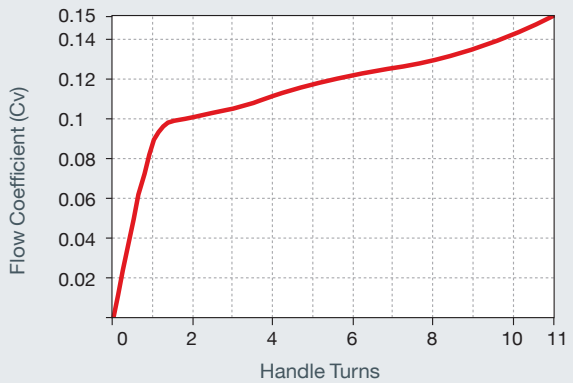

	Pressure Drop to Atmosphere psi (bar)	Water Flow U.S gal/min (L/min)	Air flow stb ft3 / min (stb L / min)
Maximum Flow Coefficient (Cv) 0.15	10 (0.68)	0.47 (1.7)	1.6 (45.3)
	50 (3.4)	1.0 (3.7)	4.5 (127)
	100 (6.8)	1.5 (5.6)	7.9 (223)

HF-1300 METERING VALVE 3° STEM

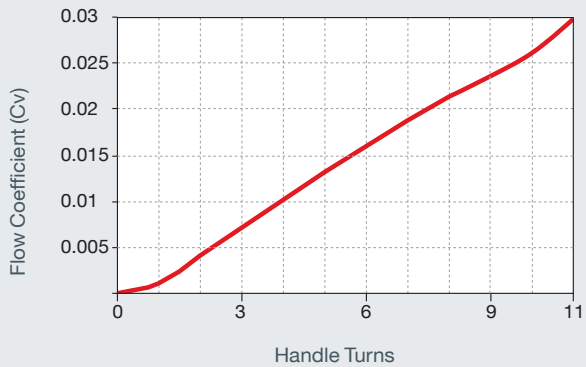

	Pressure Drop to Atmosphere psi (bar)	Water Flow U.S gal/min (L/min)	Air flow stb ft3 / min (stb L / min)
Maximum Flow Coefficient (Cv) 0.03	10 (0.68)	0.09 (0.34)	0.33 (9.3)
	50 (3.4)	0.21 (0.79)	0.9 (25.4)
	100 (6.8)	0.3 (1.1)	1.5 (42.4)

HXF-1300 METERING VALVE 1° STEM

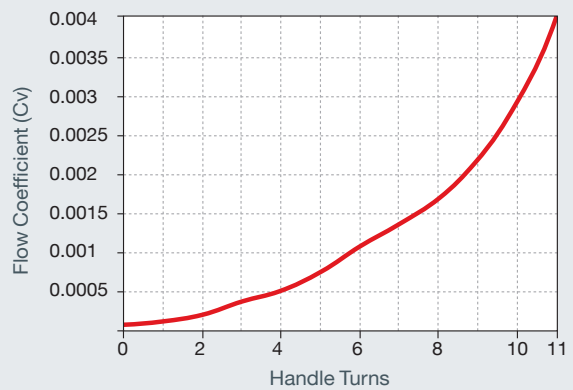

	Pressure Drop to Atmosphere psi (bar)	Water Flow U.S gal/min (L/min)	Air flow stb ft3 / min (stb L / min)
Maximum Flow Coefficient (Cv) 0.004	10 (0.68)	0.01 (0.03)	0.04 (1.1)
	50 (3.4)	0.02 (0.07)	0.1 (2.8)
	100 (6.8)	0.04 (0.15)	0.2 (5.5)

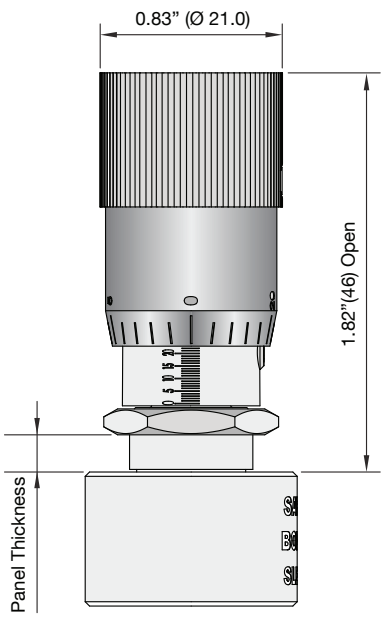

TECHNICAL DATA							
Series	Pressure - Temperature Ratings			Orifice		Shutoff Service	Angle
	*O-ring Material	Temperature Rating °F (°C)	Pressure psig (bar)	inch	mm		
H	Buna N	-10 to 300 (-23 to 149)	1000 (68.9)	0.13	3.3	*Yes	5°
	Ethylene Propylene	-10 to 300 (-23 to 149)					
HF	Viton® (Fluorocarbon)	-15 to 400 (-26 to 204)	1000 (68.9)	0.055	1.4	No	3°
	Perfluor	-0 to 300 (-18 to 149)					
HXF	Neoprene	-10 to 250 (-23 to 121)	2000 (138)	0.03	0.8	No	1°

Viton® (Fluorocarbon) is a standard O-ring for H,HF,HXF-1300

***Shutoff Service:** In Stainless Steel constructions only.
H-1300 Series valves are not recommended for shutoff
in vacuum or gas service or for repetitive shutoff in liquid service.

HANDLE OPTIONS

Vernier Handle

Optional for H, HF & HXF

Round Aluminum Handle*

Standard for H

* Black is Standard.
Colored Handles are available upon request, see "Ordering Information"

Metal Slotted Handle

Standard for HF

Metal Slotted Handle

Standard for HXF

METERING BALL VALVE MBV SERIES

FEATURES

- On/Off and Metering service
- PFA Encapsulated Ball Stem design
- Panel Mounting as standard
- MAWP 2000 psi (138 bar) for HXF
- MAWP 1000 psi (69 bar) for H, HF
- MAWT 300°F (150°C)
- End Connections: LET-LOK 1/16”, 1/8”, 1/4”, 3/8”; FNPT 1/8”; MNPT 1/8”, 1/4”; Male Face Seal 1/4”
- 1°, 3° and 5° Stem Taper for required flow control
- Stem with Stopper shoulder for long life service

GENERAL

The Shut-off Metering Ball Valve Series provides the highest degree of precision metering for moderate pressure applications.
This series features innovative and unique shut-off capability and allows full control of the process from complete shut-off to extra fine regulation.
A choice of three precision stem tapers enables metering at flow capacities as low as CV= 0.001 with up to 11 handle turns.
This valve is the ultimate solution for precision flow control.

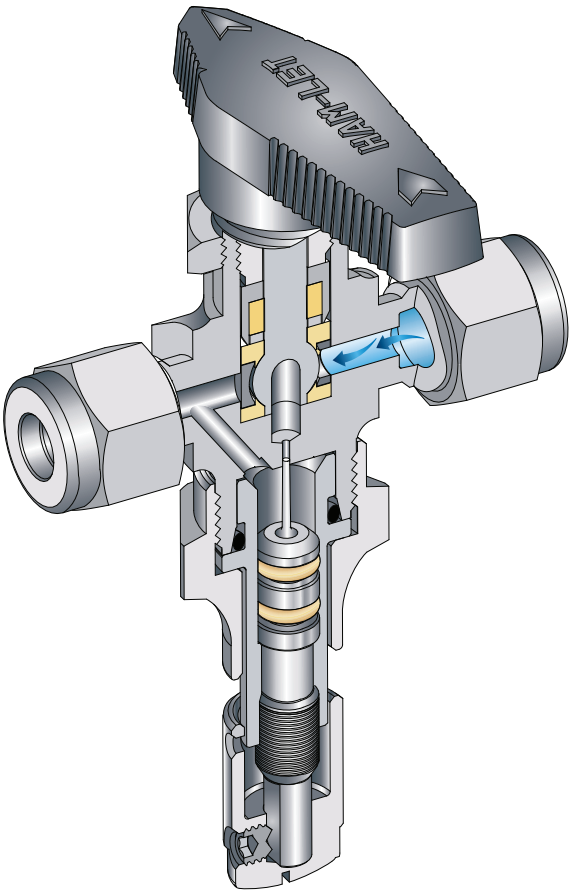

MBV CLOSE POSITION

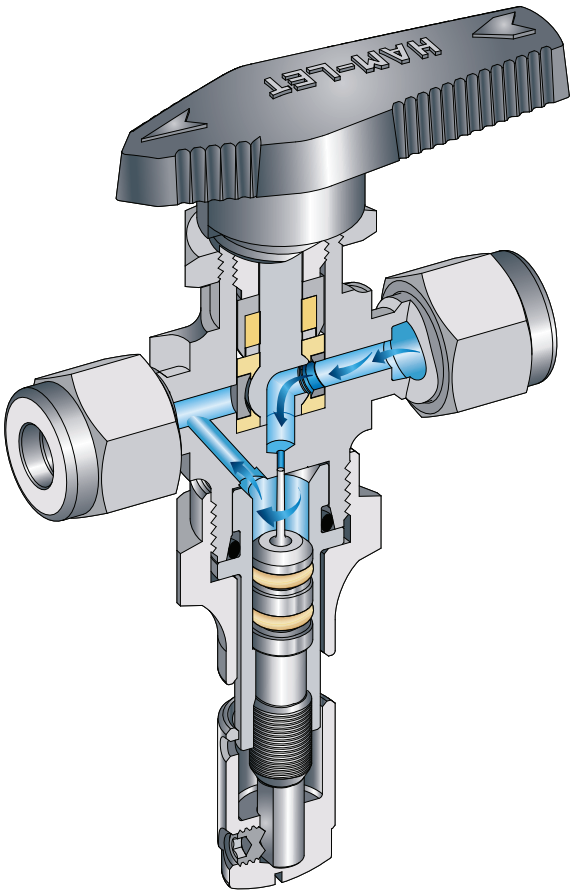

MBV OPEN POSITION

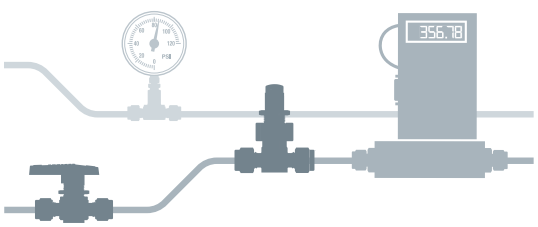

Old concept

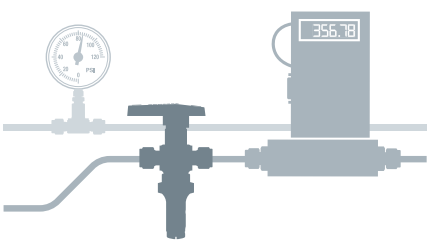

New concept

METERING BALL VALVE DIMENSIONS

Basic Ordering Number	Stem Taper Angle	Orifice		Cv	End Connections	A		B Open		C		D		E Max		F Diameter		G		H		J		K Open Position	
		mm	in			mm	in	mm	in	mm	in	mm	in	mm	in	mm	in	mm	in	mm	in	mm	in	mm	in
H-1300	50	3.3	0.13	0.13 Max.	1/4" LET-LOK	56.1	2.21	65.7	2.59	34.8	1.37	8.6	0.34	5.9	0.23	15.1	0.59	31.0	1.22	29.0	1.14	21.1	0.83	72.0	2.83
HF-1300	30	1.4	0.055	0.03 Max.	1/4" LET-LOK	56.1	2.21	60.0	2.36	34.8	1.37	8.6	0.34	5.9	0.23	15.1	0.59	31.0	1.22	12.5	0.49	21.1	0.83	72.0	2.83
HXF-1300	10	0.8	0.03	0.004 Max.	1/4" LET-LOK	56.1	2.21	60.0	2.36	34.8	1.37	8.6	0.34	5.9	0.23	15.1	0.59	31.0	1.22	12.5	0.49	21.1	0.83	72.0	2.83

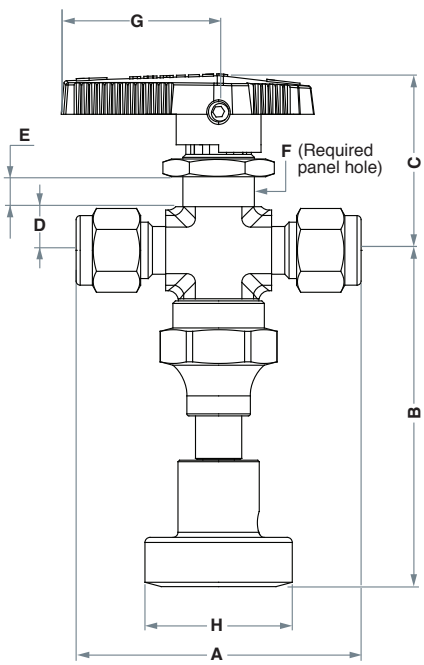

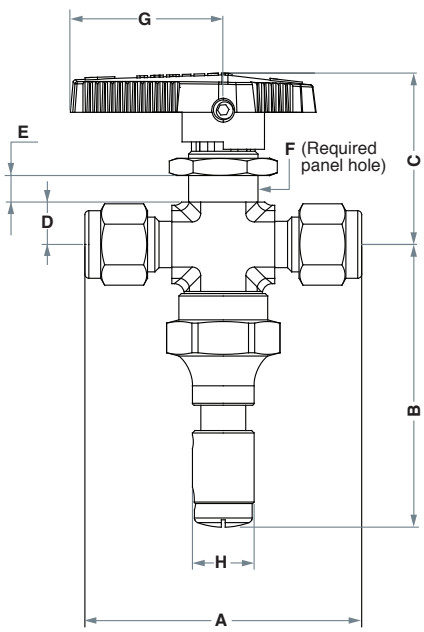

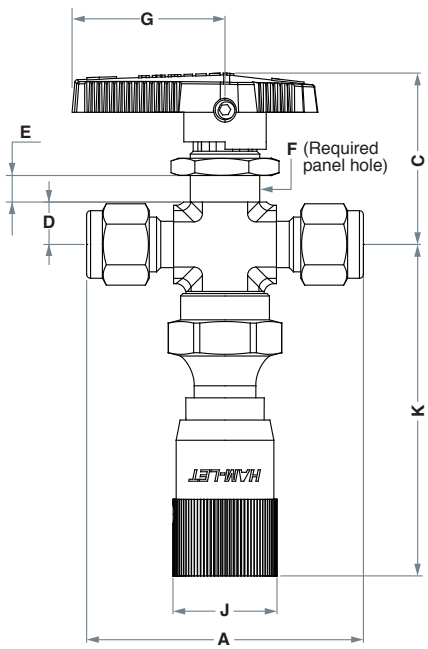

H-1300 ORDERING INFORMATION

OPTIONAL

H-13 - 00 - SS - L - 1/4 - S - [ ] - [ ] - [ ]

Valve Series

H-13	- 5° stem taper
HF-13	- 3° stem taper
HXF-13	- 1° stem taper

End Connection

L	- LET-LOK®
N	- Threaded NPT
GL	- Male Face Seal
HL	- ONE-LOK®

O-ring Material

EP	- EPDM,
NE	- Neoprene
KZ	- Perfluor
BU	- Buna-N

Viton® O-rings are standard

Valve Type

00	- LET-LOK® End
10	- Female End
80	- Male End
95	- Male to LET-LOK® End

End Connection Size

1/6	
1/8	3 MM
1/4	6 MM
3/8	

Handle Options

VER	- Vernier Handle
RH	- Red Aluminum Handle*
YH	- Yellow Aluminum Handle*
GH	- Green Aluminum Handle*
BH	- Blue Aluminum Handle*

* for H-1300 only

Body and Ends Material

SS	- St.St. 316
B	- Brass

Pattern Valve Type

S	- Straight Port Valve
A	- Angle Port Valve
800	- MBV Configuration

Treatment

BLANK	- Standard Cleaning & Passivation
OC	- Oxygen Clean
LF	- Lubricant Free

SEAL KIT

Seal Kit contains O-ring

Z - 1300 - SK - 1/4 - VI

Body Designator per end connection

1/4	for all end connections

O-Ring material

VI	VITON®
EP	EPDM
NE	Neoprene
KZ	Perfluor
BU	Buna-N

HANDLE KIT

Handle Kit contains handle + set screw.

Z - 1300 - HK - 1/4 - VER

Handle Options

1/4	for all end connections

Handle Options

VER	- Vernier Handle
RH	- Red Aluminum Handle*
YH	- Yellow Aluminum Handle*
GH	- Green Aluminum Handle*
BH	- Blue Aluminum Handle*
M	- Metal slotted Handle**

* for H-1300 only
**for HF & HXF-1300 only

Warning! For your safety
The system designer and user have the sole responsibility for selecting products suitable for their special application requirements, ensuring their safe and trouble-free installation, operation, and maintenance. Application details, material compatibility and product ratings should all be considered for each selected product. Improper selection, installation or use of products can cause property damage or personal injury.

Viton® - TM DuPont

H-1300, Rev.07, July 2011